SINGLE LINE VOLUMETRIC

LUBRICATION SYSTEM - OIL & SEMI FLUID GREASE

These systems use manual, pneumatic and electric operated pumps to dispense the lubricant through Positive Displacement Injectors (PDI's) to the lube points. These systems are more positive compared to the single line resistance systems as the injectors deliver a precise and predetermined volumetric dose of lubricant. The quantity metered is unaffected by temperature or lubricant viscosity.
These injectors are non adjustable (to prevent tampering) and are available in ten output quantities to cover all applications.
Pumps can be supplied with electronic control units or without to suit machine PLC controls.

APPLICATIONS FOR THIS SYSTEM
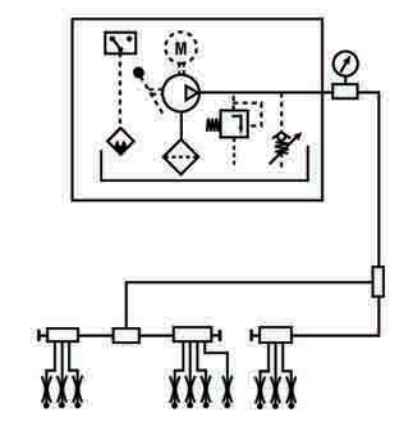
- CNC machine tools, bearings, slideways etc.
- Packaging machinery.
- Printing machinery including presses, binders and guillotines.
- Stamping presses.
- Sheet metal machinery.
- Chain lubrication.
- Any production machinery.
- Special purpose machines.